Exchanger connection options	
Standard	F1/F4 = G 1" - 28mm long F2/F3 = G 5/4" - 28mm long
Alternative	On request
Other	
Additional	On rear positions L1 to L4
Studs & Bolts	On request

Side 1 **Side 2**

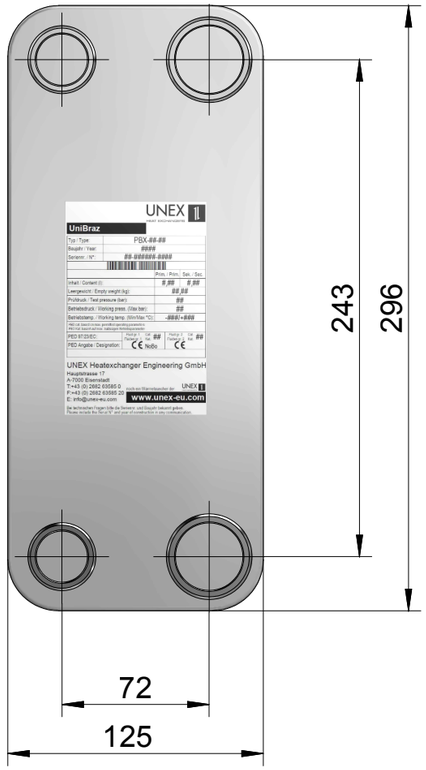

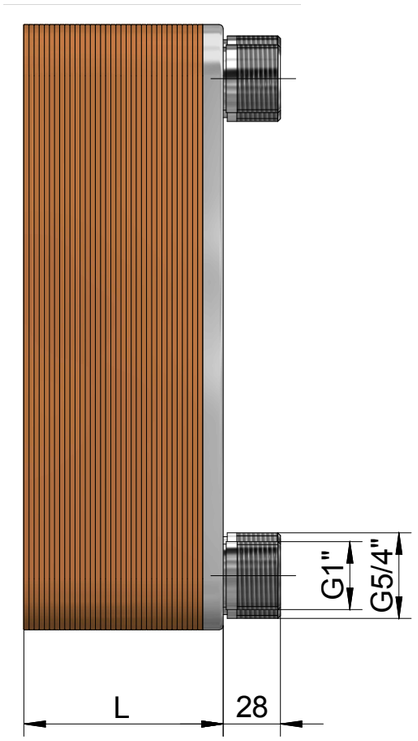

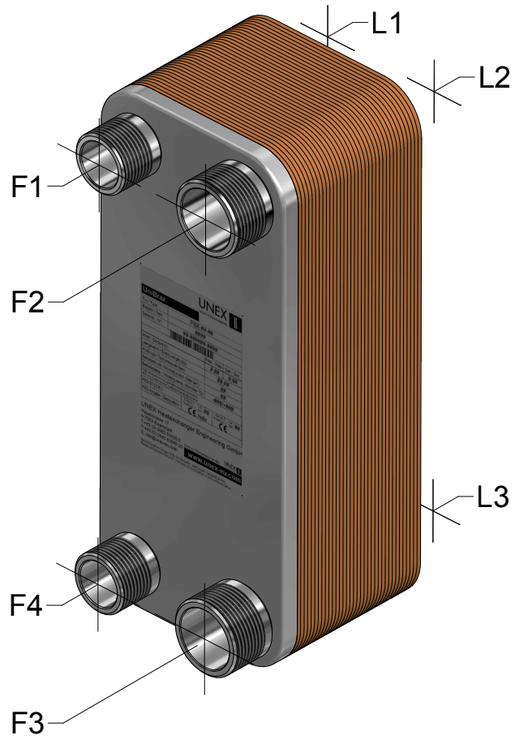

Insulation options	Example picture
Aluminium coated PU foam Heating applications to +150°C (Peak)	
Self-adhevise rubberised Cooling applications -50 to +105°C	
Easy-fit shell Heating applications to +135°C	

Mounting options	Example picture
Angled Wall Bracket "L" bracket including strap & screws	

Detachable pipe connection options	Example picture

Amount of plates	**38**									
Volume Side 1 (l)*	1.15									
Volume Side 2 (l)*	1.22									
Max working pressure (bar)	30									
Min / Max temperature (°C)	-195 / +195									
PED Class Group 2 (Category)	SEP									
Plate packet depth L(mm)*	96.4									
Net Weight Empty (kg)	5.9									
Heat Transfer Area (m²)	1.44									

* Calculated values (final tolerance to ISO 2768-m)

Where appropriate the following European standards and regulations were used during design and construction:

97/23/EC (Pressure Equipment Directive)
EN 1148 (Water to water heat exchangers for district heating)
EN 10272 (Stainless steel bars used for pressure purposes)
EN 10028-7 (Stainless steel flat products used for pressure purposes)
EN 13445 (Unfired Pressure Vessels)
ISO 2768-m (General tolerances class "m")
ISO 228-1 ("G" Thread BSP parallel)
Please ask your sales partner if you require other standards or certification to be applied.

©2015 Errors, Omissions and Technical Alterations excepted

Sizes in mm unless otherwise shown

Connections : 1.4301 (304) / Plates : 1.4404 (316L) / Braze : Cu 99.9%

UNEX HEAT EXCHANGERS
UNEX Heatexchanger Engineering GmbH
Hauptstrasse 17
A-7000
Eisenstadt
Austria
www.unex-eu.com
info@unex-eu.com
Tel: + 43 (0) 2682 635 85 0
Fax: + 43 (0) 2682 635 85 20

Scale
M 1:3 (A3)

Status	Change	Date	Name		Date	Name
				Drawn by	10.07.2015	AWU
				Checked by	14.07.2015	DRO

PBU13_STD_15_Rev00